EigenLight CORPORATION

Optical Amplifier Analyzer

EigenLight's Optical Amplifier Analyzer (OAA) is a simple, easy to use instrument designed for production testing of optical fiber amplifiers, providing simultaneous measurement of amplifier gain, input power, total output power, and filtered output power. The filtered output power is measured using an internal fiber bragg grating to eliminate amplifier ASE power from the signal power.

FEATURES

- **3-Channel Power Measurement from -40 dBm to +28 dBm**
- **LCD Display for Each Channel**
- **Absolute or Relative Power Measurement on Each Channel**
- **User Specified Filter Center Wavelength for Filtered Power Measurement**
- **Battery Powering for Field Use Available**
- **RS232 or RS485 Output Available**

SPECIFICATIONS	
Wavelength Range	1520 to1620 nm
Power Range	-40 dBm to +28dBm
Absolute Accuracy	+/- 0.2 dB
Insertion Loss	≤2.0 dB
Directivity[1]	>45 dB
Return Loss[2]	>40 dB
Polarization-Dependent Loss	<0.1 dB
Polarization Stability[3]	≤0.2 dB
Fiber Type	9/125 Single-Mode
Operating Temperature	10°C to +35°C
Storage Temperature	-10°C to +60°C
Power	120 VAC (or Battery Powered with >3 Year Life)
Displays	Liquid Crystal
Functions	DBm/dB Each Channel
Display Refresh Rate	0.1 Seconds
Display Resolution	0.1 dB
Data Output	Analog Voltage Each Channel RS-232 or RS-485 (RS-232 and RS-485 AC Powered Units Only)
Case Material[4]	Anodized Aluminum
Size	16.7"W x 3.5"H x 12"D
Weight	6 lbs
BRAGG FILTER SPECIFICATIONS	
Center Wavelength (CWL)	1525 nm to 1575 nm (specify when ordering)
FWHM Bandwidth[5]	1 nm Standard
Reflectivity	>95%
CWL Temp. Coefficient	+ 0.02 nm/°C
CWL Tolerance[5]	+/- 0.2 nm
FWHM Tolerance[5]	+/- 0.2 nm

1. *Sensitivity to forward directed light relative to backward directed light*
2. *Measured at any optical port (not including connectors)*
3. *Maximum change in reading with polarization*
4. *Comes with rack mounting hardware for standard 19" rack*
5. *Others available*

30 Centre Rd Somersworth, NH 03878 | Phone: 603.692.9200 | Fax: 603.692.9205 | www.eigenlight.com

Optical Amplifier Analyzer

OAA Block Diagram

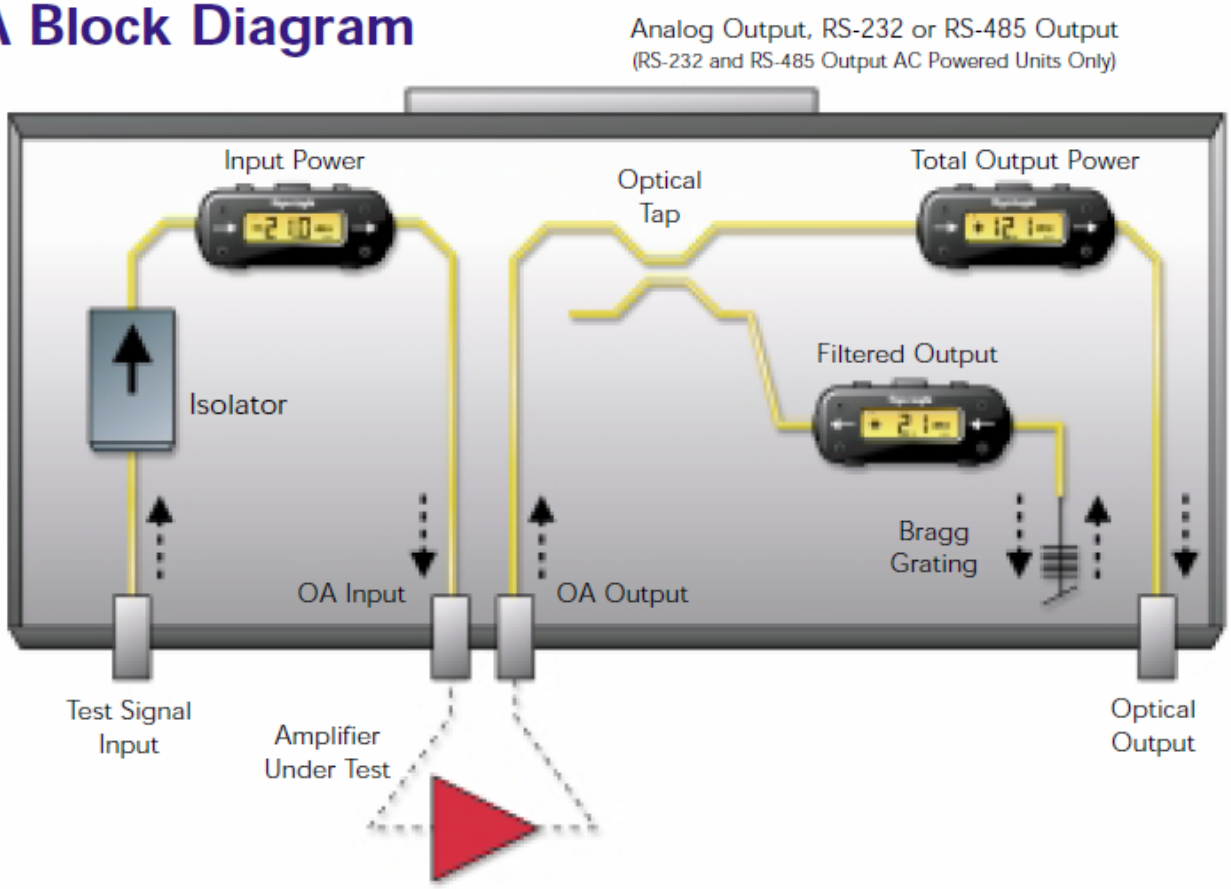

Ordering Information for OAA

Powering
1 – 120 VAC
2 – Battery
(3 Year Battery Life)

Wavelength
(e.g. 15501–1550.1 nm)

Connector Type
See Table on Right

OAA□□–□□□□□–□□

Data Output
1 – Analog Voltage Each Channel (1 millivolt/dBm)
2 – RS-232 (120 VAC only)
3 – RS-485 (120 VAC only)

Connectors

Code	Connector Type
10	FC
15	FC/APC
20	ST
25	ST/APC
30	SC
35	SC/APC

30 Centre Rd Somersworth, NH 03878 | Phone: 603.692.9200 | Fax: 603.692.9205 | www.eigenlight.com